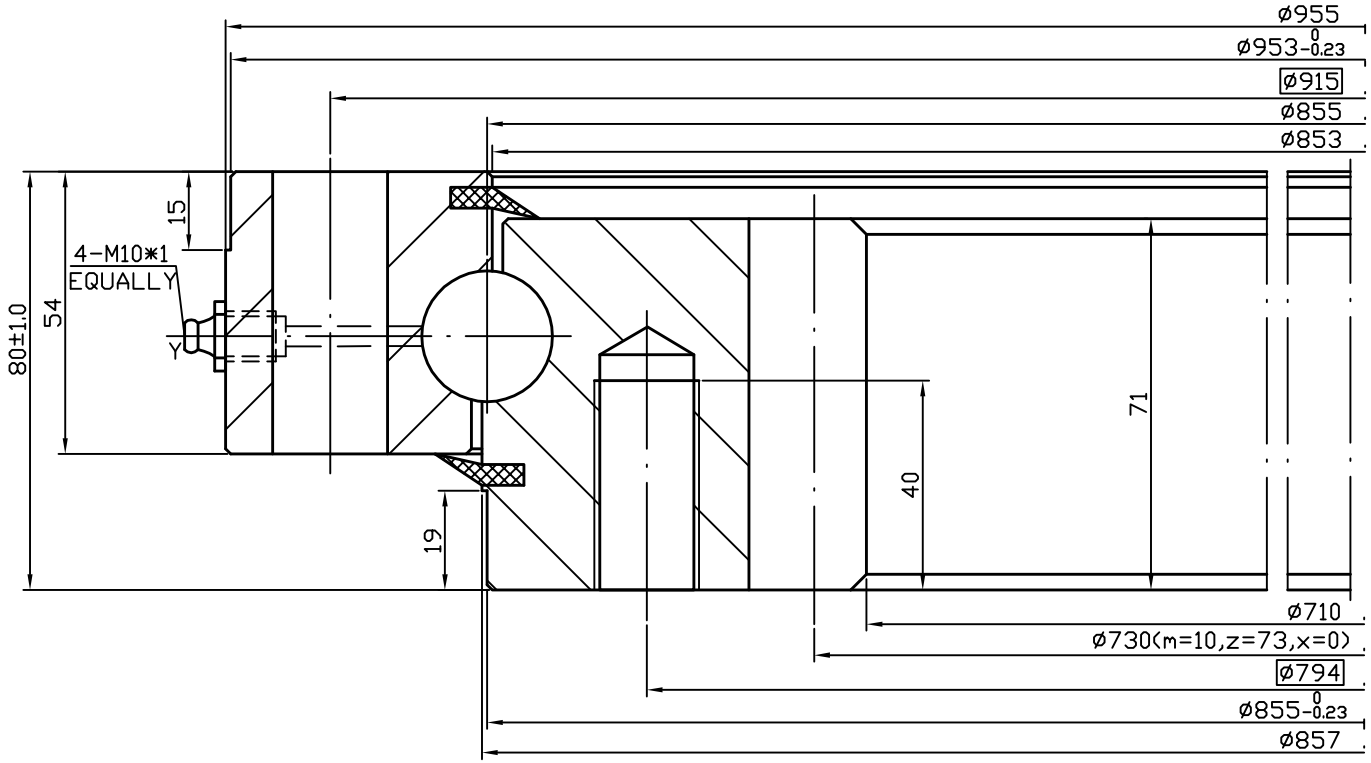

MODULE	m	10
NO. OF TEETH	z	73
PRES.ANGLE	α	20°
PITCH DIA.	ø730	
SHIFT	x	0
ADDENDUM	10	
DEDENDUM	12.5	
GEAR ACCURACY	10FH (GB10095-88)	
TOOTH THICKNESS	$W_{K}{}^{Ewa}_{Ewf}$	$261.16^{+0.494}_{+0.306}$
NO. OF THICKED TEETH	K	9

Radial clearance:< 0.25mm
Axial clearance:<0.3mm

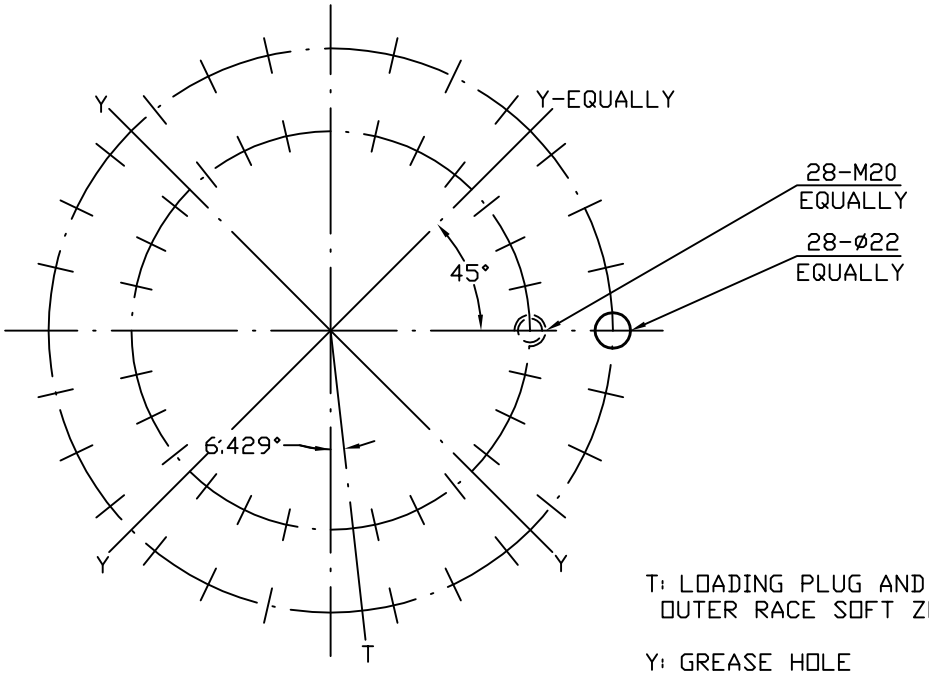

T: LOADING PLUG AND OUTER RACE SOFT ZONE

Y: GREASE HOLE

Tolerance	0.5~3	>3~6	>6~30	>30~120	>120~400	>400~1000	>1000~2000
m	±0.1	±0.1	±0.2	±0.3	±0.5	±0.8	±1.2

NO.	REMARK	NAME OF PAPT	QUANTITY	MATERIAL
8	A-M10*1	GREASE	4	
7	ø10*70	TAPER PIN	1	45
6	DS35*50	LOADING PLUG	1	50Mn
5		INNER RACE	1	50Mn
4	MT17	SEAL	2	NBR
3	QG25	SEPARATOR	91	PA-1010
2	Sø25.4	STEEL BALL	91	100Cr6
1		OUTER RACE	1	50Mn

						Sturm Praezision GmbH	SLEWING RING
							QND855.25Z
APP.						WEIGH	SCALE
						137Kg	112.25.0855.00.00.10
CHK							
DWG.						2008.6.25	